TYPES YAV-R, YAV-RS

HYLUG™

Heavy Duty Right-Angle Terminals

Factory formed right angle HYLUG™ connectors made of seamless pure copper tubing. These rugged terminals withstand the most severe applications. Inspection hole in barrel permits visual check of wire insertion. Tin plated to resist corrosion. Meets requirements of SAE-AS7928.

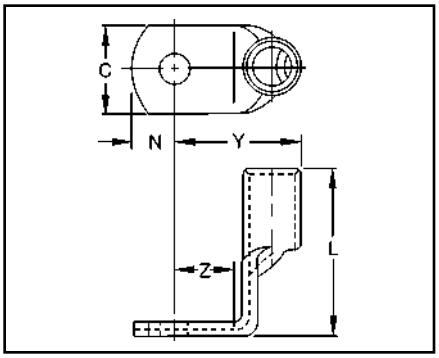

Catalog Number	Wire Range	Stud Size	Dimensions C	L Max.	Y Max.	Z Min.	N	Installation Tooling	Wire Strip Length
YAV18-R	22-18	8-10	.31	.35	.54	.25	.16	Non-Ratchet: Y10D Ratchet: Y8MRB-1, MR20, MR8-G98, MR8-9Q	1/4
YAV14-RL33	20-14	4-6	.25	.37	.45	.21	.12		
YAV14-R		8-10	.31	.38	.57	.25	.16		
YAV10-R	12-10	8-10	.38	.55	.58	.25	.19		5/16
YAV10-R3 BOX		1/4	.47	.57	.60	.28	.23		

Bulk Catalog Number	Wire	Stud	Dimensions in Inches C	L Max.	Y Max.	Z Min.	N	Installation Tooling HYTOOL™	HYPRESS™ Y29NC, Y29BH Nest	Indentor	Wire Strip Length	Tool ▲ Index Number
YAV8C-RS	8	8-10	.41	1.00	.75	.25	.20	MY28 MY29-11	DV8L*	Y29PL	7/16″	38
YAV8C-RS1		1/4	.41	1.00	.79	.28	.20					
YAV8C-RS3		3/8	.56	1.00	.85	.34	.20					
YAV6C-RS1	6	8-10	.50	1.02	.81	.28	.25		DV6L		1/2″	39
YAV6C-RS		1/4	.50	1.02	.81	.28	.25					
YAV6C-RS4		5/16	.59	1.02	.89	.34	.31					
YAV6C-RS2		3/8	.59	1.02	.89	.34	.31					
YAV4C-RS3	4	8-10	.53	1.04	.87	.28	.25		DV4L			40
YAV4C-RS		1/4	.53	1.04	.87	.28	.25					
YAV4C-RS4		5/16	.62	1.04	.95	.34	.31					
YAV4C-RS2		3/8	.62	1.04	.95	.34	.31					
YAV2C-RS1	2	1/4	.68	1.27	1.05	.34	.33		DV2L		5/8″	41
YAV2C-RS2		5/16	.68	1.27	1.05	.34	.33					
YAV2C-RS		3/8	.68	1.27	1.05	.34	.33					
YAV1C-RS1	1	1/4	.73	1.35	1.15	.34	.33		DV1L		5/8″	42
YAV1C-RS2		5/16	.73	1.35	1.15	.34	.33					
YAV25-RS	1/0	3/8	.82	1.51	1.29	.43	.39		DV25L	Y29PR	11/16″	43
YAV25-RS3		1/2	.88	1.51	1.32	.47	.44					
YAV26-RS	2/0	3/8	.92	1.63	1.40	.47	.39		DV26L		13/16″	44
YAV26-RS3		1/2	.92	1.63	1.40	.47	.39					
YAV27-RS	3/0	3/8	1.02	1.65	1.54	.47	.48		—	—	7/8″	45
YAV28-RS	4/0	3/8	1.13	1.80	1.54	.47	.48					46

* For aircraft applications (Flex\ible Cable) use die DV8L-1.

▲ See Present Installation Tool Index starting on page 0-35.